NO.	NAME	Q'TY	MATERIAL	WEIGHT PER ONE	WEIGHT TOTAL	REMARKS
1	FILTER		PTFE	1.8Kg		
2						
3						

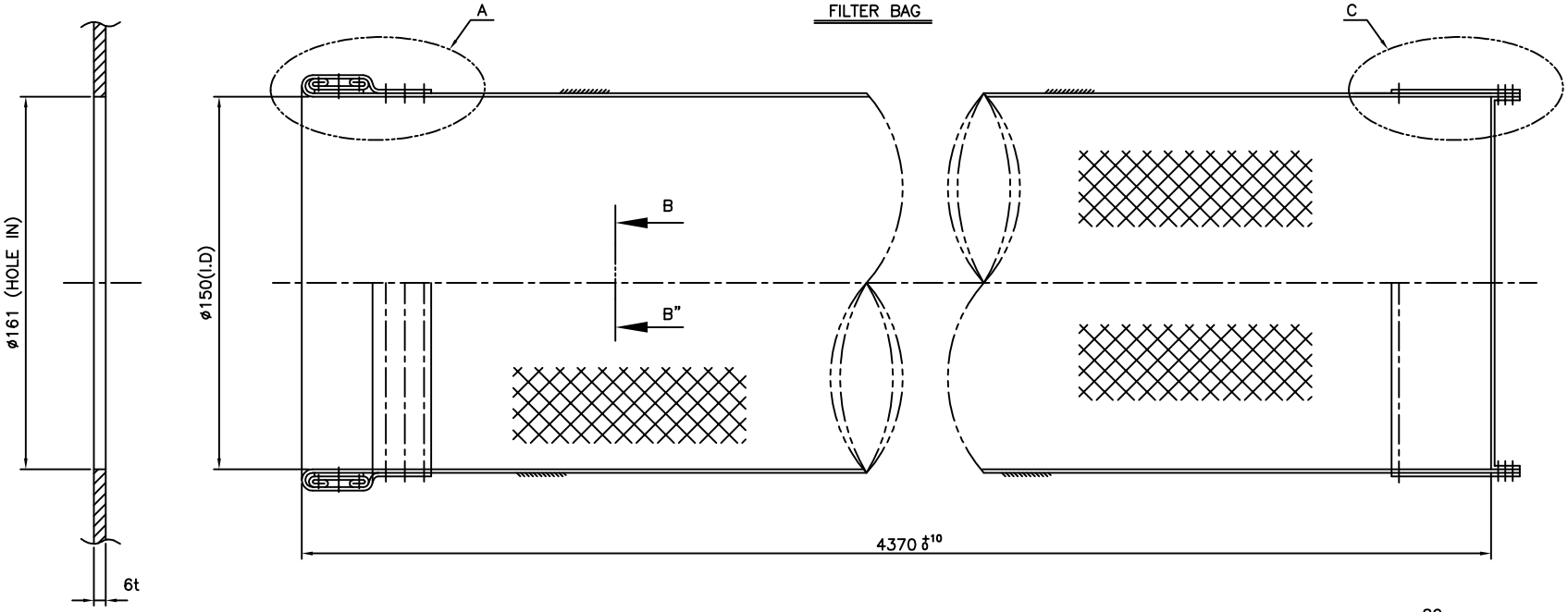

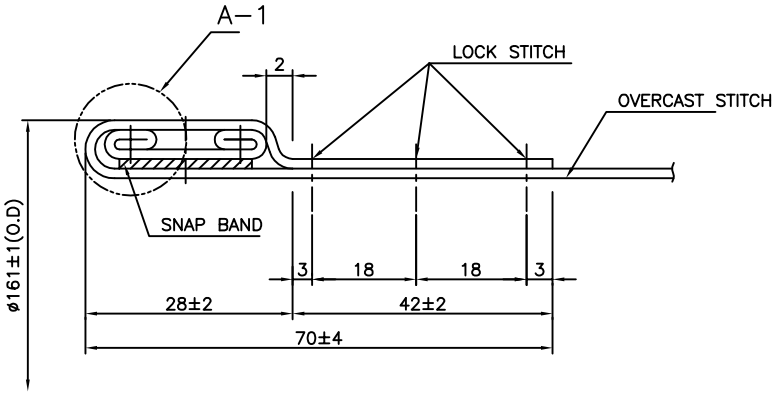

DETAIL A

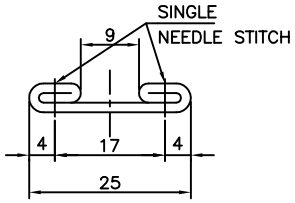

DETAIL A-1

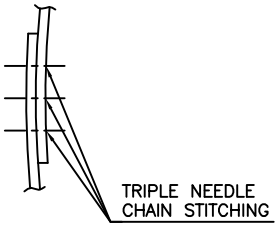

SECTION B-B"

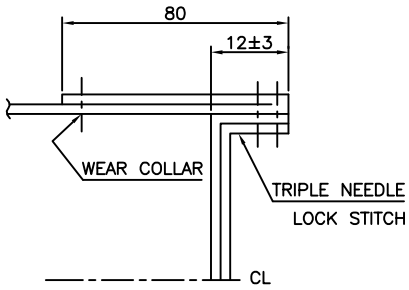

DETAIL C

SPECIFICATION	
MATERRIAL	100% PTFE (WHITE)+ PTFE Coating
WEIGHT	750g/m²
SIZE	ø150(I.D)x4370L
TEMP.	MAX 260 °C

REV.	DATE	REV. DESCRIPTION	DRAWN	CHECKED	REVIEWED	APPROVED
△	2020.03.04	FOR APPROVAL				

Designed by
Checked by
Approved by
Issue Date
Release
Unit: mm
Scale: N/S
Language: English
Quality
Customer
A1

Title: BAG FILTER DRAWING
Drawing No.: FILTER – AFT – QT4370
Spec No.
Index
Supplier: Advnced Filter Technology Co., Ltd.

REV △	DWG No.	PJT. No